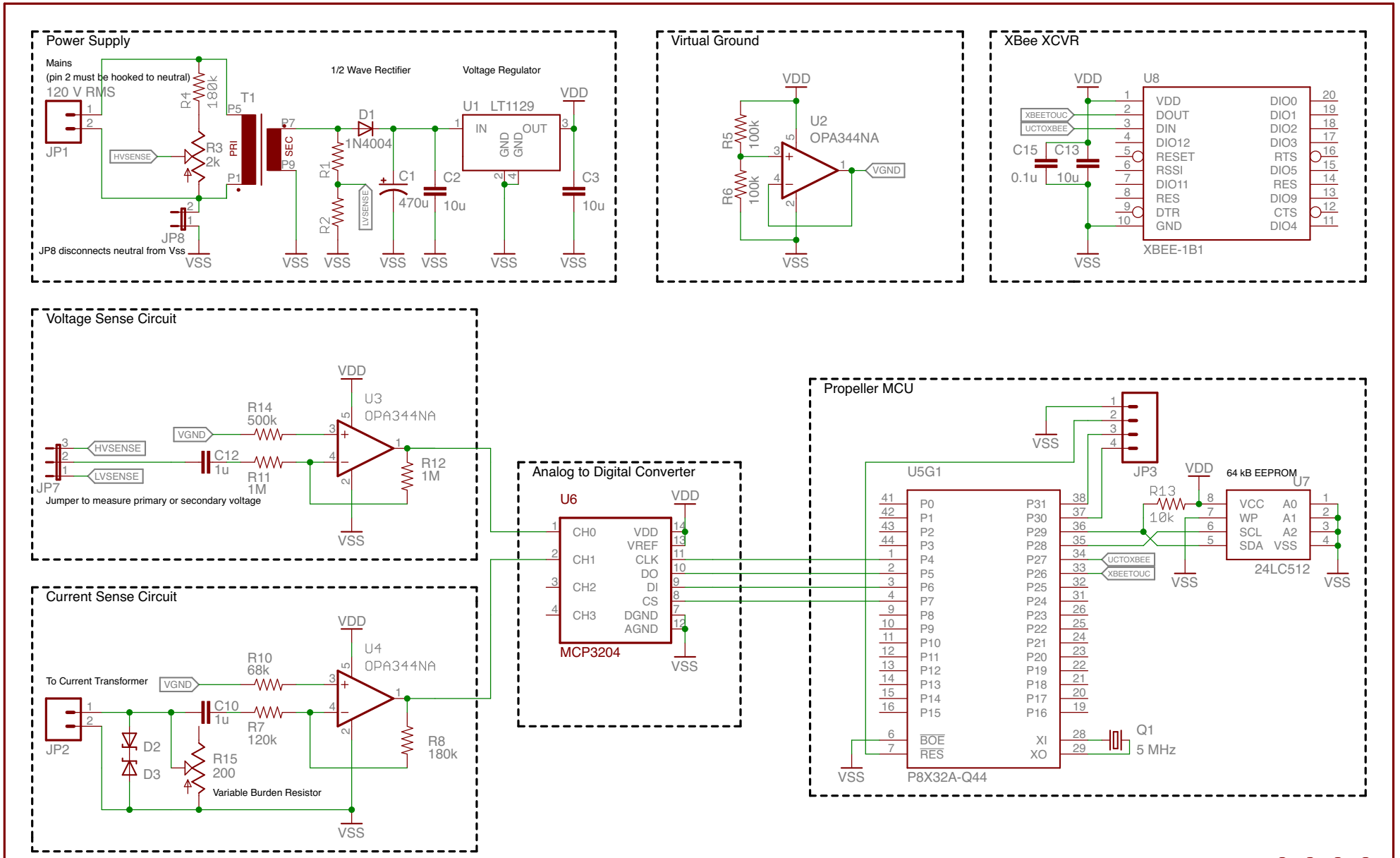
Power Supply
Mains
(pin 2 must be hooked to neutral)
120 V RMS
JP1
R4 180k
R3 2k
HVSENSE
T1
PRI
SEC
P5
P1
P7
P9
JP8
JP8 disconnects neutral from Vss
1/2 Wave Rectifier
D1
1N4004
R1
R2
LVSENSE
C1 470u
C2 10u
Voltage Regulator
U1 LT1129
IN
OUT
GND
GND
C3 10u
VDD
VSS
Virtual Ground
U2 OPA344NA
R5 100k
R6 100k
VGND
XBee XCVR
U8
XBEE-1B1
XBEETOUC
UCTOXBEE
C15 0.1u
C13 10u
VDD
DOUT
DIN
DIO12
RESET
RSSI
DIO11
RES
DTR
GND
DIO0
DIO1
DIO2
DIO3
RTS
DIO5
RES
DIO9
CTS
DIO4
Voltage Sense Circuit
U3 OPA344NA
R14 500k
R11 1M
C12 1u
R12 1M
HVSENSE
LVSENSE
JP7
Jumper to measure primary or secondary voltage
Current Sense Circuit
U4 OPA344NA
To Current Transformer
R10 68k
R7 120k
C10 1u
R8 180k
JP2
D2
D3
R15 200
Variable Burden Resistor
Analog to Digital Converter
U6
MCP3204
CH0
CH1
CH2
CH3
VDD
VREF
CLK
DO
DI
CS
DGND
AGND
Propeller MCU
U5G1
P8X32A-Q44
JP3
R13 10k
64 kB EEPROM
U7
24LC512
VCC
WP
SCL
SDA
A0
A1
A2
VSS
Q1 5 MHz
XI
XO
BOE
RES
Notes
> OPA344 is optional. Less expensive single supply rail to rail opamps shoud work.
> Be careful working with mains. Never handle circuit when mains is attached.
> Testing has shown that the wave form of LV sense is distorted.
You can still measure voltage off the secondary, perhaps by ignoring the upper half.
Decoupling Capacitors
C4 0.1u
C5 0.1u
C6 0.1u
C7 0.1u
C8 0.1u
C9 0.1u
C11 0.1u
C16 0.1u
Title: Energy Meter
REV: 3
Designed by: Jay Kickliter <jay@kickliter.com>
Frank Lynam <frank@lynam.net>
Date: 3/17/11 8:06 PM
Sheet: 1/1